Technical Data Sheet

Stainless steel Pillow blocks

UCPA 200

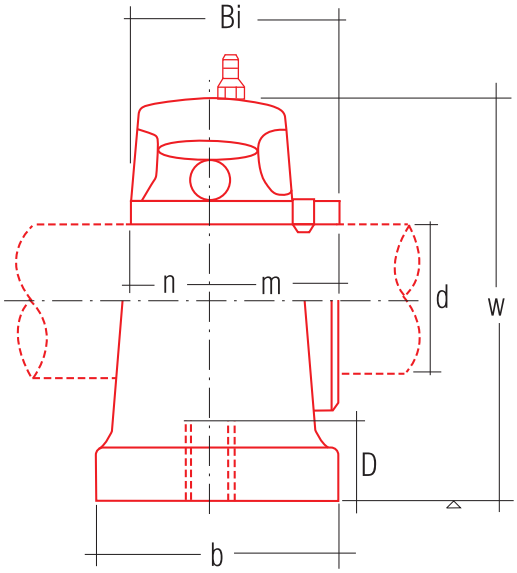

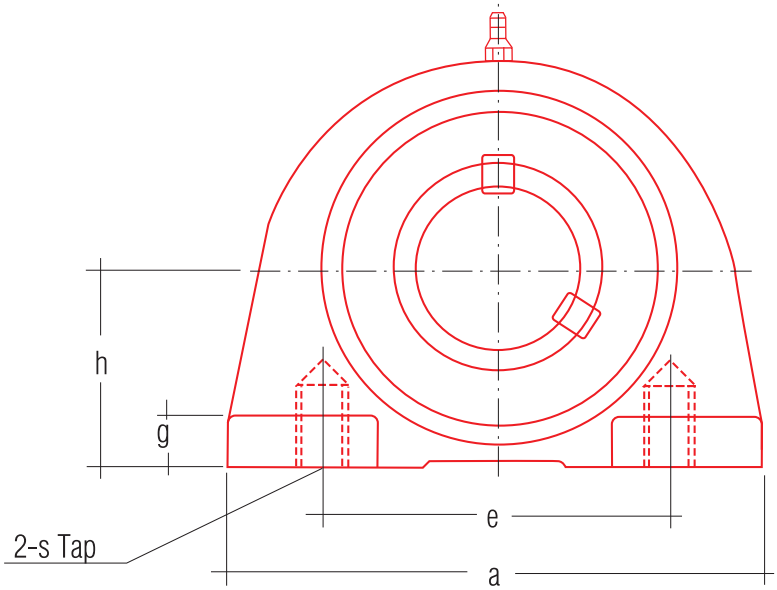

INOX

MODEL N.	mm	h	a	e	b	s(mm)	g	w	D	Bi	n	mm	Bolt Used	kg
UCPA 201 UCPA 202 UCPA 203	12 15 17	30.2	76	52	40	10	11	62	13	31.0	12.7	18.3	10	0.6
UCPA 204	20	30.2	76	52	40	10	11	62	13	31.0	12.7	18.3	10	0.6
UCPA 205	25	36.5	84	56	45	10	12	72	15	34.0	14.3	19.7	10	0.8
UCPA 206	30	42.9	94	66	50	14	12	84	18	38.1	15.9	22.2	14	1.2
UCPA 207	35	47.6	110	80	55	14	13	95	20	42.9	17.5	25.4	14	1.7
UCPA 208	40	49.2	116	84	58	14	13	100	20	49.2	19.0	30.2	14	2.0
UCPA 209	45	54.2	120	90	60	14	13	108	25	49.2	19.0	30.2	14	2.2
UCPA 210	50	57.2	130	94	64	16	14	116	25	51.6	19.0	32.6	16	2.8

mcr-components©2009

Due to continue technical improvements, specifications are subject to change without notice